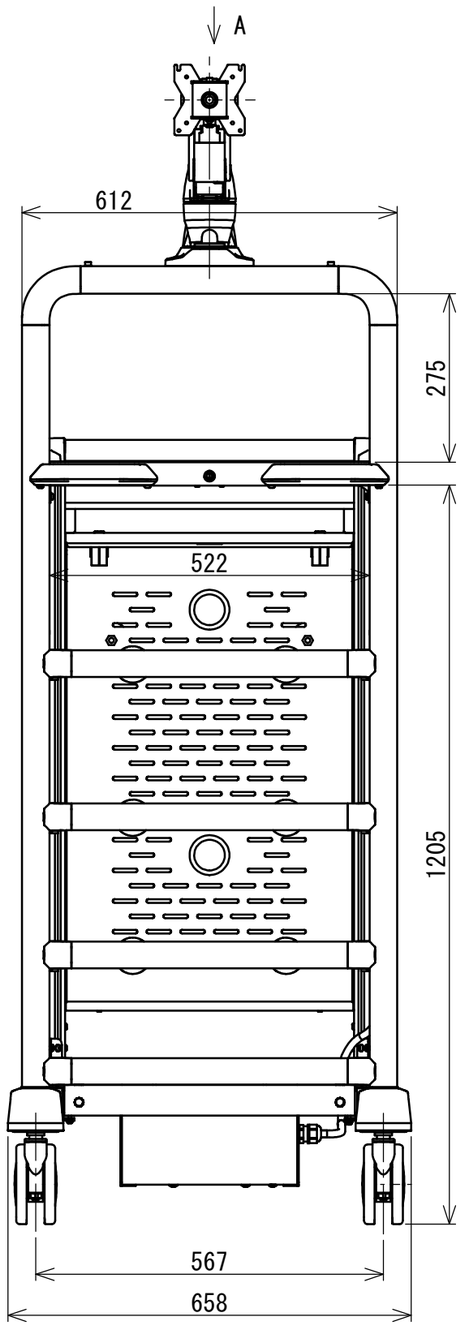

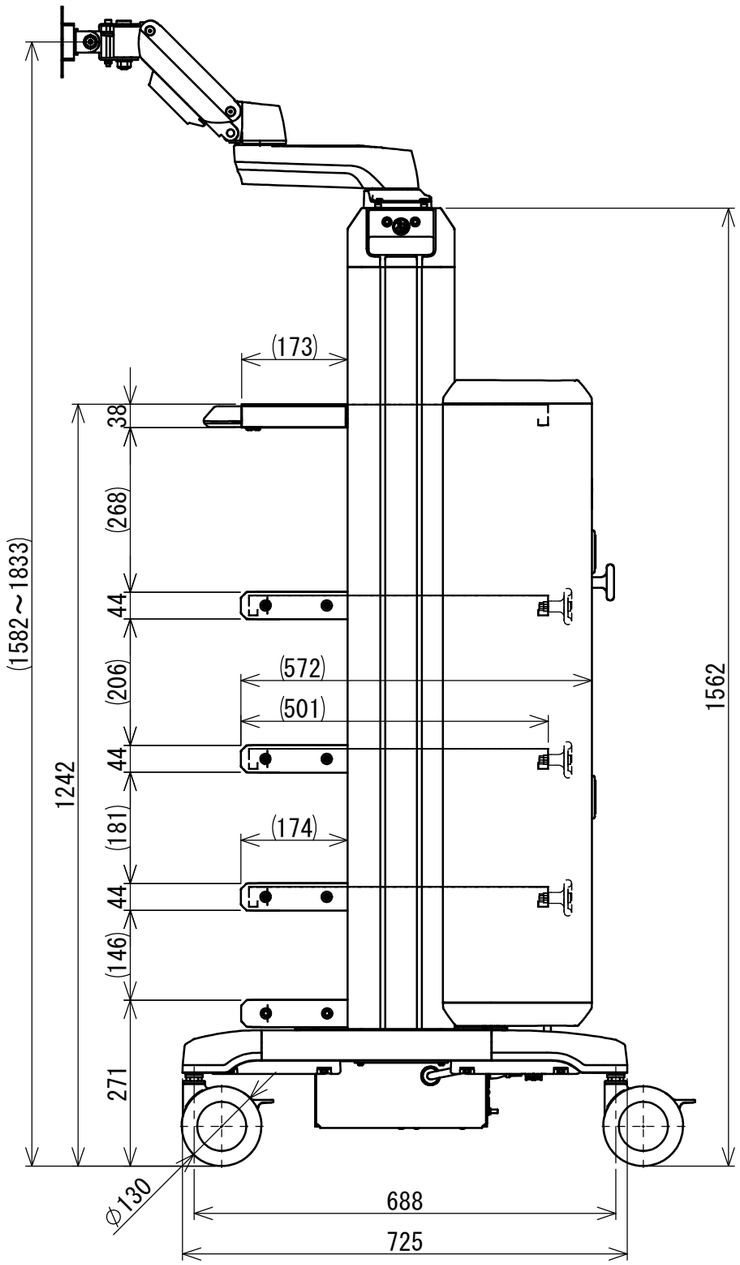

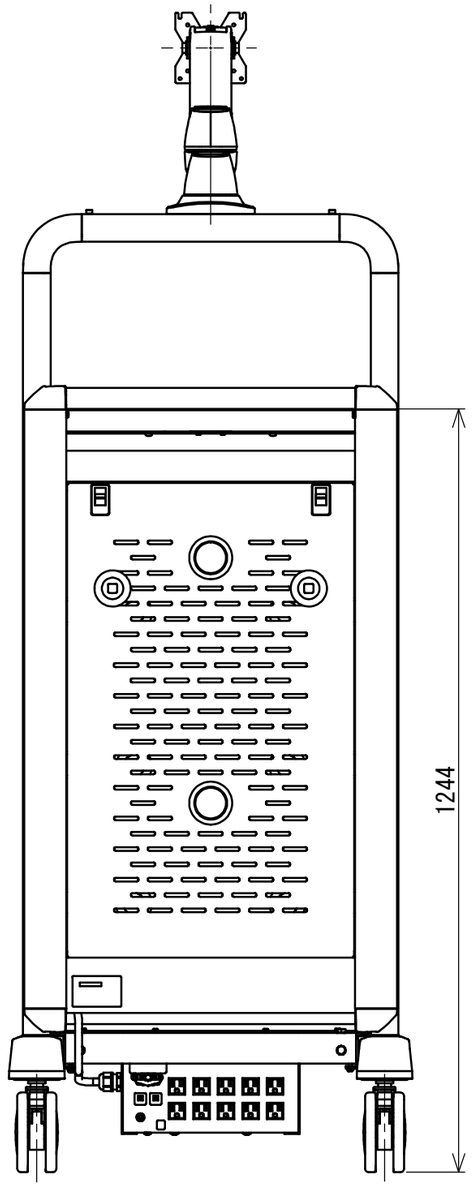

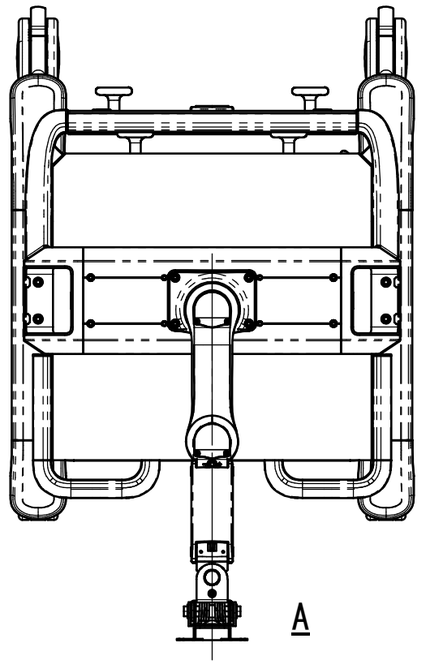

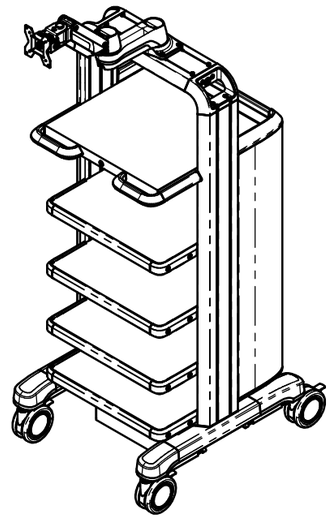

SPECIFICATION DRAWING

FUJI FLEX	FUJI FLEX
25.12.01	25.12.01
TUAN	E.NISHIYAMA

NOTES
1 WEIGHT: ABOUT 112kg
2 DESIGN AND SPECIFICATION SUBJECT TO CHANGE WITHOUT NOTICE

注記
1 重量：約112kg
2 仕様および外観は、改良のため予告なく変更することがあります。

APPROVED	REV. DATE	DESCRIPTION	BY	△	REV

MATERIAL ———	DIMENSION MILLIMETERS	FUJI FLEX Co., Ltd.
TREATMENT ———	SCALE A3(1:10)	SYSTEM NAME MEDION-Ⅲ WIDE HIGH FMT-5000
FINISH ———	DATE 2025-11-28	ITEM DESCRIPTION ———
DESIGNED TUAN	QUANTITY ———	DRAWING NUMBER F-069-057-300(REV_A)

THIRD ANGLE PROJECTION

CHECKED

FILE NAME 【SPECIFICATION DRAWING】F-069-057-300(REV_A)

FUJIFLEX FUJI FLEX Co., Ltd.